Central Carolina Soil Consulting, PLLC
1900 South Main Street, Suite 110, Wake Forest, NC 27587
Office Number: 919-569-6704

Acknowledgment of Subsurface wastewater evaluation and septic design by Central Carolina Soil Consulting, PLLC. for Shinleaf Estates Lot 27, for issuance of an IP and CA.

For Improvement Permit (IP) issuance:
"The LSS/LG evaluation(s) attached to this application is to be used to issue an Improvement Permit in accordance with G.S. 130A-335(a2) and (a3)."

For Construction Authorization (CA) issuance:
"The plans or evaluations attached to this application are to be used to issue a Construction Authorization in accordance with G.S. 130A-335(a2), (a5) and (a6)."

The LSS evaluation attached to this application was used to produce and design a subsurface wastewater septic system for permitting to obtain an IP and CA in accordance G.S. 130A-335(a2), (a3), (a5) and (a6).

Owner or Owner's Representative (print): _____

Owner or Owner's Representative (signature): _____

Date: _____

NC DEPARTMENT OF HEALTH AND HUMAN SERVICES
Division of Public Health

Permit/File #: _____

CONSTRUCTION AUTHORIZATION FOR G.S. 130A-335(a2)

County: Wake **Pre-Construction Conference Required:** Yes ☐ No ☑

PIN/Lot Identifier: 1801135779

Issued To: Toll Brothers

Property Location: 433 SHINLEAF POND TRL (Shinleaf Estates, Lot 27)

AOWE/PE Plans/Evaluations Provided: Yes ☑ No ☐ If yes, name and license number of AOWE/PE: Jason Hall, AOWE #10004E

Facility Type: Single Family

Number of bedrooms: 5 Number of Occupants: <10 Other: _____

☑ New ☐ Expansion ☐ Repair ☐ System Relocation ☐ Change of Use

Basement? ☑ Yes ☐ No Basement Fixtures? ☑ Yes ☐ No

Crawl Space? ☐ Yes ☑ No Slab Foundation? ☐ Yes ☑ No

Type of Wastewater System* IIIe, Gravity to PPBPS (Initial) IIIe, Gravity to PPBPS (Repair)

**Please include system classification for proposed wastewater system types in accordance with Rule .1301 Table XXXII*

Design Daily Flow: 600 GPD Wastewater Strength: ☑ Domestic ☐ High Strength ☐ Industrial Process WW

Session Law 2014-120 Section 53, Engineering Design Utilizing Low-flow Fixtures and Low-flow Technologies? ☐ Yes ☑ No
(if yes, please provide engineering documentation)

Effluent Standard: ☑ DSE ☐ HSE ☐ NSF/ANSI 40 ☐ TS-I ☐ TS-II ☐ RCW

Type of Water Supply: ☐ Private well ☐ Public well ☐ Shared well ☐ Municipal Supply ☐ Spring ☑ Other: Com. Well

Installation Requirements/Conditions

Septic Tank Size: 1500 gallons Total Trench/Bed Length: 340 feet Trench/Bed Spacing: 9 feet on center

Trench/Bed Width: 24 inches LTAR: .3 gpd/ft² Usable Depth to LC (Initial)ˣ: 48" ˣ***Limiting condition***

Additional Soil Cover: n/a inches Slope Corrected Maximum Trench/Bed Depth‡: 30" inches ‡ ***Measured on the downhill side of the trench***

Pump Tank Size (if applicable): _____ gallons Requires more than 1 pump? ☐ Yes ☐ No

Pump Requirements: _____ ft. TDH vs. _____ GPM Grease Trap Size (if applicable): _____ gallons

Distribution Method: ☑ Serial ☐ D-Box or Parallel ☐ Pressure Manifold(s) ☐ LPP ☐ Other: _____

Artificial Drainage Required: Yes ☐ No ☑ If yes, please specify details: _____

Legal Agreements *(If the answer is "Yes" to any type of legal agreements, please attach a copy of the agreement.)*

Multi-party Agreement Required [.0204(g)]: ☐ Yes ☑ No Declaration of Restrictive Covenants: ☐ Yes ☑ No

Easement, Right-of-Way, or Encroachment Agreement Required [.0301(b)]: ☐ Yes ☑ No

Management Entity Required: ☐ Yes ☑ No Minimum O&M Requirements: _____

Permit conditions:
fence off the entire septic area from construction traffic
Divert all gutters/downspouts from septic feild

The requirements of 15A NCAC 18E are incorporated by reference into this permit and shall be met. Systems shall be installed in accordance with the attached site sketch. *This Construction Authorization is subject to revocation if the site plan, plat, or the intended use changes.* The Construction Authorization shall not be affected by a change in ownership of the site. This Construction Authorization is subject to compliance with the provisions of 15A NCAC 18E, or 15A NCAC 18A .1900, as applicable, and to the conditions of this permit.

AOWE/PE Print Name: Jason Hall

AOWE/PE Signature: _____ Date: 02/26/26

This AOWE/PE submittal is pursuant to and meets the requirements of G.S. 130A-335(a2) and (a5).

See attached site sketch



NC DEPARTMENT OF HEALTH AND HUMAN SERVICES
Division of Public Health

Permit/File #: _____

This Section for Local Health Department Use Only

Initial submittal received: _____ by _____
Date *Initials*

G.S. 130A-335(a5) states the following:

When an applicant for a Construction Authorization, or an Improvement Permit and Construction Authorization together, submits a Construction Authorization, or an Improvement Permit and Construction Authorization application together, the permit fee charged by the local health department, the common form developed by the Department, and any necessary signed and sealed plans or evaluations conducted by a person licensed pursuant to Chapter 89C of the General Statutes as a licensed engineer or a person certified pursuant to Article 5 of Chapter 90A of the General Statutes as an Authorized On-Site Wastewater Evaluator, the local health department shall, within five business days of receiving the application, conduct a completeness review of the submittal. A determination of completeness means that the Construction Authorization or Improvement Permit and Construction Authorization includes all of the required components. If the local health department determines that the Construction Authorization or Improvement Permit and Construction Authorization is incomplete, the local health department shall notify the applicant of the components needed to complete the Construction Authorization or Improvement Permit and Construction Authorization. The applicant may submit additional information to the local health department to cure the deficiencies in the Construction Authorization or Improvement Permit and Construction Authorization. The local health department shall make a final determination as to whether the Construction Authorization or Improvement Permit and Construction Authorization is complete within five business days after the local health department receives the additional information from the applicant. If the local health department fails to act within any period set out in this subsection, the applicant may treat the failure to act as a determination of completeness. The applicant may apply for the building permit for the project upon the decision of completeness of the Construction Authorization or Improvement Permit and Construction Authorization by the local health department or if the local health department fails to act within five business days. The Authorized On-Site Wastewater Evaluator or licensed engineer submitting the evaluation pursuant to this subsection may request that the local health department revoke or suspend the Construction Authorization or Improvement Permit and Construction Authorization for cause. Upon written request of the Authorized On-Site Wastewater Evaluator or licensed engineer, the local health department shall suspend or revoke the Construction Authorization or Improvement Permit and Construction Authorization pursuant to G.S. 130A-23. The Department shall develop a common form for use as the Construction Authorization.

The review for completeness of this Construction Authorization was conducted in accordance with G.S. 130A-335(a5). This Construction Authorization is determined to be:

☐ Incomplete (If box is checked, information in this section is required.)

The following items are missing: _____

_____

Copies of this were sent to the AOWE/PE and the Applicant on _____
Date

State Authorized Agent: _____ Date: _____

☐ Complete

State Authorized Agent: _____ Date of Issuance: _____

This Construction Authorization is issued pursuant to G.S. 130A-335(a2) and (a5) using the signed and sealed plans or evaluations attached here. This Construction Authorization is subject to revocation if the site plan, plat, or the intended use changes. The Construction Authorization shall not be affected by a change in ownership of the site. This Construction Authorization is subject to compliance with the provisions of the Laws and Rules for Sewage Treatment and Disposal and to the conditions of this permit.

The Department, the Department's authorized agents, and the local health departments shall be discharged and released from any liabilities, duties, and responsibilities imposed by statute or in common law from any claim arising out of or attributed to plans, evaluations, preconstruction conference findings, submittals, or actions from a person licensed pursuant to Chapter 89C of the General Statutes as a licensed engineer or a person certified pursuant to Article 5 of Chapter 90A of the General Statutes as an Authorized On-Site Wastewater Evaluator in GS 130A-335(a2), (a5), and (a7). The Department, the Department's authorized agents, and the local health departments shall be responsible and bear liability for their actions and evaluations and other obligations under State law or rule, including the issuance of the operations permit pursuant to GS 130A-337.

Construction Authorization Expiration Date: _____

See attached site sketch

NC DEPARTMENT OF HEALTH AND HUMAN SERVICES
Division of Public Health

Permit/File #: _____

Re-submittal of Construction Authorization

LHD USE ONLY: This CA resubmittal received: _____ by _____
Date *Initials*

The following items are being resubmitted pursuant to G.S. 130A-335(a5) for issuance of the Construction Authorization:

_____

_____

_____

_____

I, _____hereby attest that the information required to be included with this re-submittal
Authorized Onsite Wastewater Evaluator (Print Name)
is accurate and complete to the best of my knowledge and that the proposed Construction Authorization meets all applicable federal, State, and local laws, regulations, rules, and ordinances.

_____ _____
Signature of Authorized On-Site Wastewater Evaluator *Date*

The section below is for Local Health Department use after submittal of items noted as missing above.

LHD Follow-up Completeness Review of Construction Authorization

The review for completeness of this Construction Authorization re-submittal was conducted in accordance with G.S. 130A-335(a5). This Construction Authorization is determined to be:

☐ Incomplete (If box is checked, information in this section is required.)

The following items are missing:

_____

_____

Copies of this were sent to the AOWE/PE and the Applicant on _____
Date

State Authorized Agent: _____ Date: _____

☐ Complete

State Authorized Agent: _____ Date: _____

System: Gravity to Serial Dist.
Lines: 1–4, (340')
T&J Panel 50% Reduction
0.3 Soil LTAR
30" Trench Bottom

Repair: Gravity to Serial Dist.
Lines: 5–9, (440')
T&J Panel 50% Reduction
0.3 Soil LTAR
30" Trench Bottom

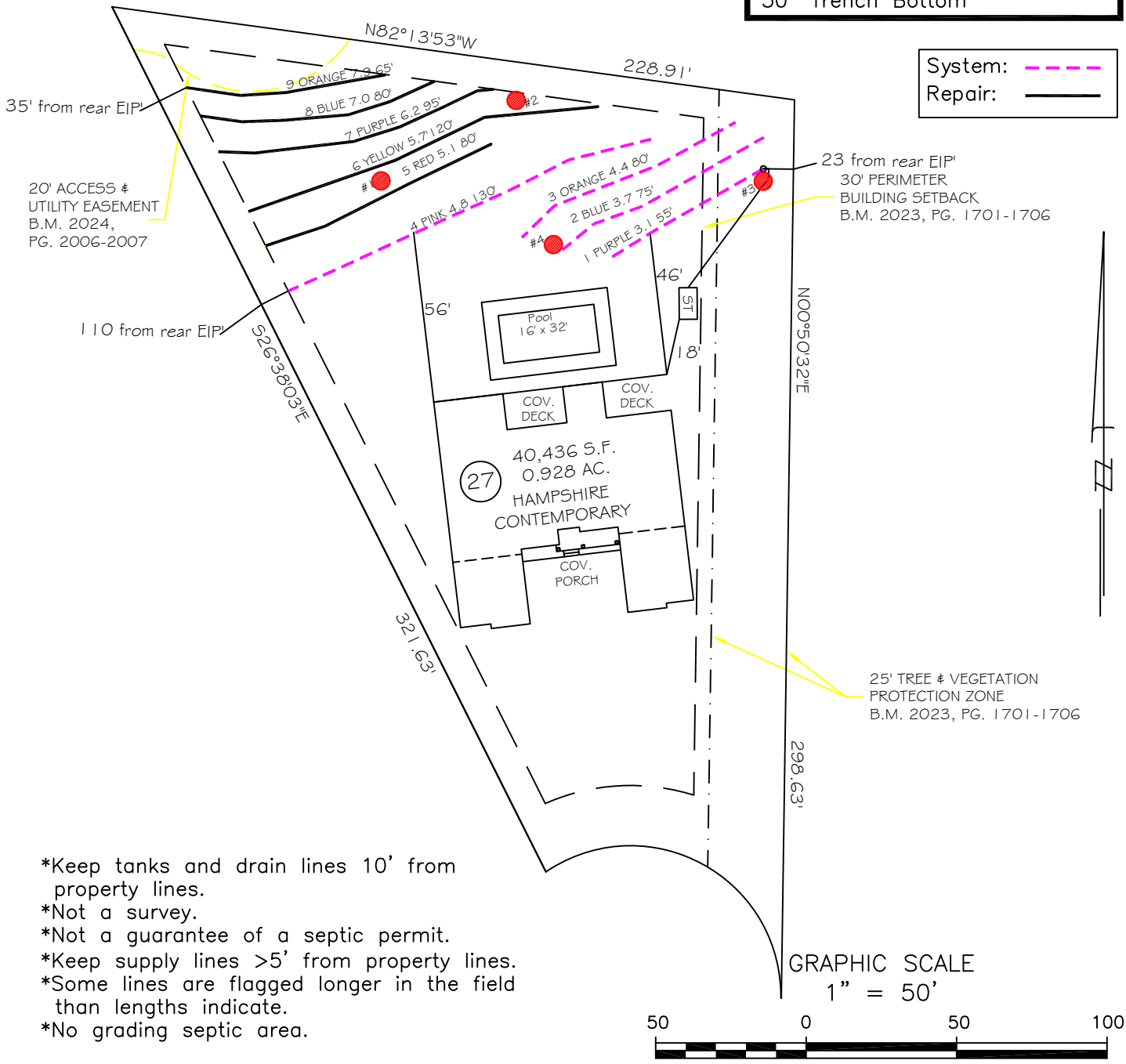

*Keep tanks and drain lines 10' from property lines.
*Not a survey.
*Not a guarantee of a septic permit.
*Keep supply lines >5' from property lines.
*Some lines are flagged longer in the field than lengths indicate.
*No grading septic area.

GRAPHIC SCALE
1" = 50'
50 0 50 100

Central Carolina Soil Consulting, PLLC
1900 South Main Street, Suite 110
Wake Forest, North Carolina 27587
Phone (919)569–6704 Fax (919)569–6703

5-Bedroom Septic Layout
Lot 27, Shinleaf Estates Subdivision
Wake County, North Carolina

Job# : 621
Drawn By : AH
Date : 02/25/2026
Revision:

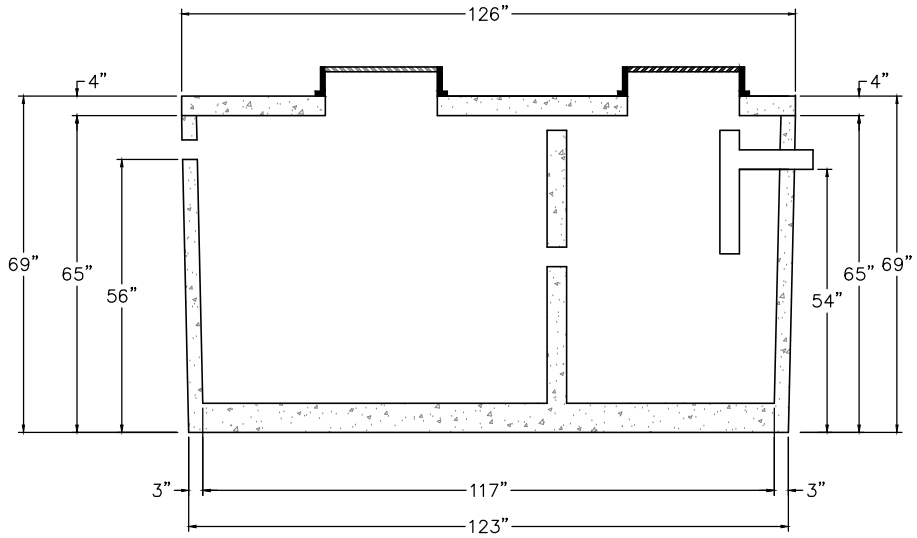

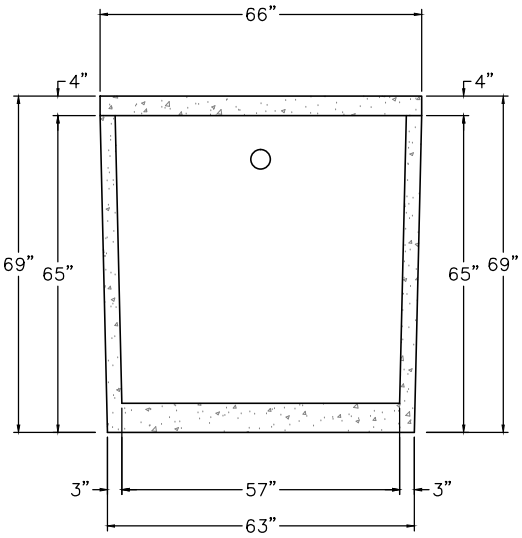

1,500 ST-322

NTS

NON TRAFFIC BEARING

REVISION NO.	DATE
Original Submittal	April 11, 2014
Revision 1	
Revision 2	
Revision 3	
Master Set	------

PREPARED FOR : David Brantley & Sons
37 Pine Ridge Rd.
Zebulon, NC 27597

DATE : April 11, 2014

CONTACT:
CORY BRANTLEY

BRANTLEY TANK MODEL
1,500 ST 322

SHEET NUMBER
1 of 1

DAVID BRANTLEY & SONS
37 Pine Ridge Rd.
Zebulon, NC 27597
Office 252-478-3721
Fax 919-573-0443
installer@gmail.com

POLYLOK™ Inc.
Innovations in Precast, Drainage & Wastewater Products
Zabel® A Division of Polylok Inc.

PL-68 Effluent Filter

PL-68 Filter and Tee

PL-68 is much more than just an effluent filter. The housing can also be used as an inlet baffle (tee) or an outlet baffle. The housing is designed to accept Polylok's snap in gas deflector to deflect gas bubbles away from the tee and to keep the solids in the tank.

Features:

- Offers 68 linear feet of 1/16" filter slots, which significantly extends time between cleaning.
- Accepts 3/4" PVC handle.
- Locks in any 360° position when used with PL-68 Tee.
- PL-68 Housing can be used as an inlet or outlet tee.
- Gasket prevents bypass.

PL-68 Installation:

Ideal for residential waste flows up to 800 gallons per day (GPD). Easily installs in any new or existing 4" outlet tee.

1. Locate the outlet of the septic tank.
2. Remove the tank cover and pump tank if necessary.
3. Glue the filter housing to the outlet pipe, or use a Polylok Extend & Lok if not enough pipe exists.
4. Insert the PL-68 filter into tee.
5. Replace and secure the septic tank cover.

PL-68 Maintenance:

The PL-68 Effluent Filter will operate efficiently for several years under normal conditions before requiring cleaning. It is recommended that the filter be cleaned every time the tank is pumped, or at least every three years.

1. Do not use plumbing when filter is removed.
2. Pull PL-68 out of the tee.
3. Hose off filter over the septic tank. Make sure all solids fall back into septic tank.
4. Insert filter back into tee/housing.

Related Products:

PL-68 Filter Concrete Baffle
Extend & Lok™



Extend & Lok™
Easily installs into existing tanks.

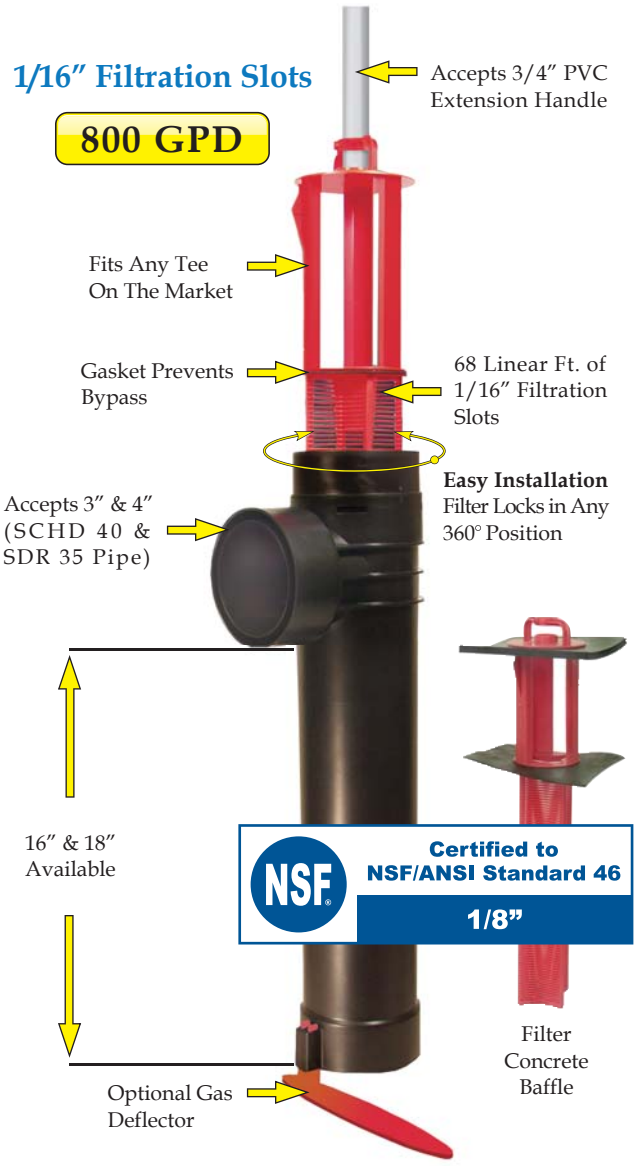



Spacer Bushing 4" SCHD 40 to SDR 35



Spacer Bushing 4" SCHD 40 to 110mm Pipe



2" Extender

Polylok, Inc. 3 Fairfield Blvd. Wallingford, CT 06492 Toll Free: 877.765.9565 Fax: 203.284.8514 www.polylok.com

Shinleaf Estates, lot 27

T&J Panel Block (Initial System)

Line	Length	Trench Area	Number of Panels	Spacing between Panels (in)	Feet of 2in PVC
1	55	165	13	4.4	24
2	75	225	17	6.6	32
3	80	240	18	6.9	34
4	130	390	30	5.8	58

Total Line Footage: **340**

Total Footage of 2in PVC: **148**

Total Number of Panels: **78**

T&J Panel Block Orientation: **Vertical**

Backfill Sand Needed: **57.8 tons**

backfill sand needed +5%: **60.69 tons**

Notes: Spacing of panels is spacing between each panel AND spacing at the beginning and end of the line.

Shinleaf Estates, Lot 27

T&J Panel Block (Repair System)

Line	Length	Trench Area	Number of Panels	Spacing between Panels (in)	Feet of 2in PVC
5	80	240	18	6.9	34
6	120	360	28	5.2	54
7	95	285	22	5.6	42
8	80	240	18	6.9	34
9	65	195	15	5.6	28

Total Line Footage: **440**

Total Footage of 2in PVC: **192**

Total Number of Panels: **101**

T&J Panel Block Orientation: **Vertical**

Backfill Sand Needed: **74.8 tons**

backfill sand needed +5%: **78.54 tons**

Notes: Spacing of panels is spacing between each panel AND spacing at the beginning and end of the line.