I, MICHAEL A. MOSS, CERTIFY THAT THIS PLAT WAS DRAWN UNDER MY SUPERVISION FROM AN ACTUAL SURVEY MADE UNDER MY SUPERVISION; THAT THE SOURCE OF INFORMATION FOR THE SURVEY IS SHOWN HEREON; THAT THE BOUNDARIES NOT SURVEYED ARE CLEARLY INDICATED; THAT THE RATIO OF PRECISION IS GREATER THAN 1:10,000; THAT THIS PLAT WAS PREPARED IN ACCORDANCE WITH G.S. 47-30 AS AMENDED: AND THAT THIS MAP MEETS THE REQUIREMENTS OF THE STANDARDS OF PRACTICE FOR LAND SURVEYING IN NORTH CAROLINA (21 NCAC 56. 1600). WITNESS MY ORIGINAL SIGNATURE, REGISTRATION NUMBER AND SEAL

THIS 23RD DAY OF MARCH ,2017.

PROFESSIONAL LAND SURVEYOR (L-3794)

NORTH CAROLINA PROFESSIONAL SEAL L-3794 LAND SURVEYOR MICHAEL A. MOSS

I, MICHAEL A. MOSS, PROFESSIONAL LAND SURVEYOR NO. L-3794, CERTIFY THAT THIS PLAT IS OF A SURVEY OF AN EXISTING PARCEL OR PARCELS OF LAND AND DOES NOT CREATE A NEW STREET OR CHANGE AN EXISTING STREET.

MICHAEL A. MOSS, PROFESSIONAL LAND SURVEYOR NO. L-3794

FRANKLIN COUNTY, NORTH CAROLINA
I, Mason Rogers REVIEW OFFICER OF FRANKLIN COUNTY, CERTIFY THAT THE MAP OR PLAT TO WHICH THIS CERTIFICATION IS AFFIXED MEETS ALL STATUTORY REQUITEMENTS FOR RECORDING.

3-28-17 Mason T. Rogers
DATE REVIEW OFFICER

RECORDED IN MAP BOOK, 2017_____

ADOPTED FROM NC GRID NAD 83'

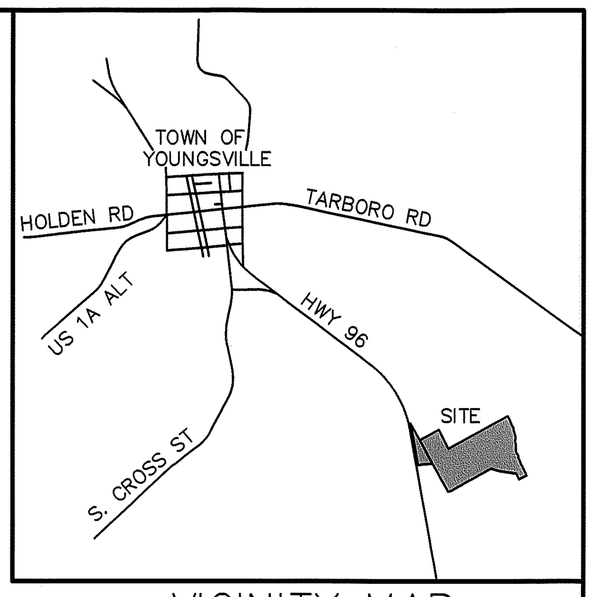

VICINITY MAP

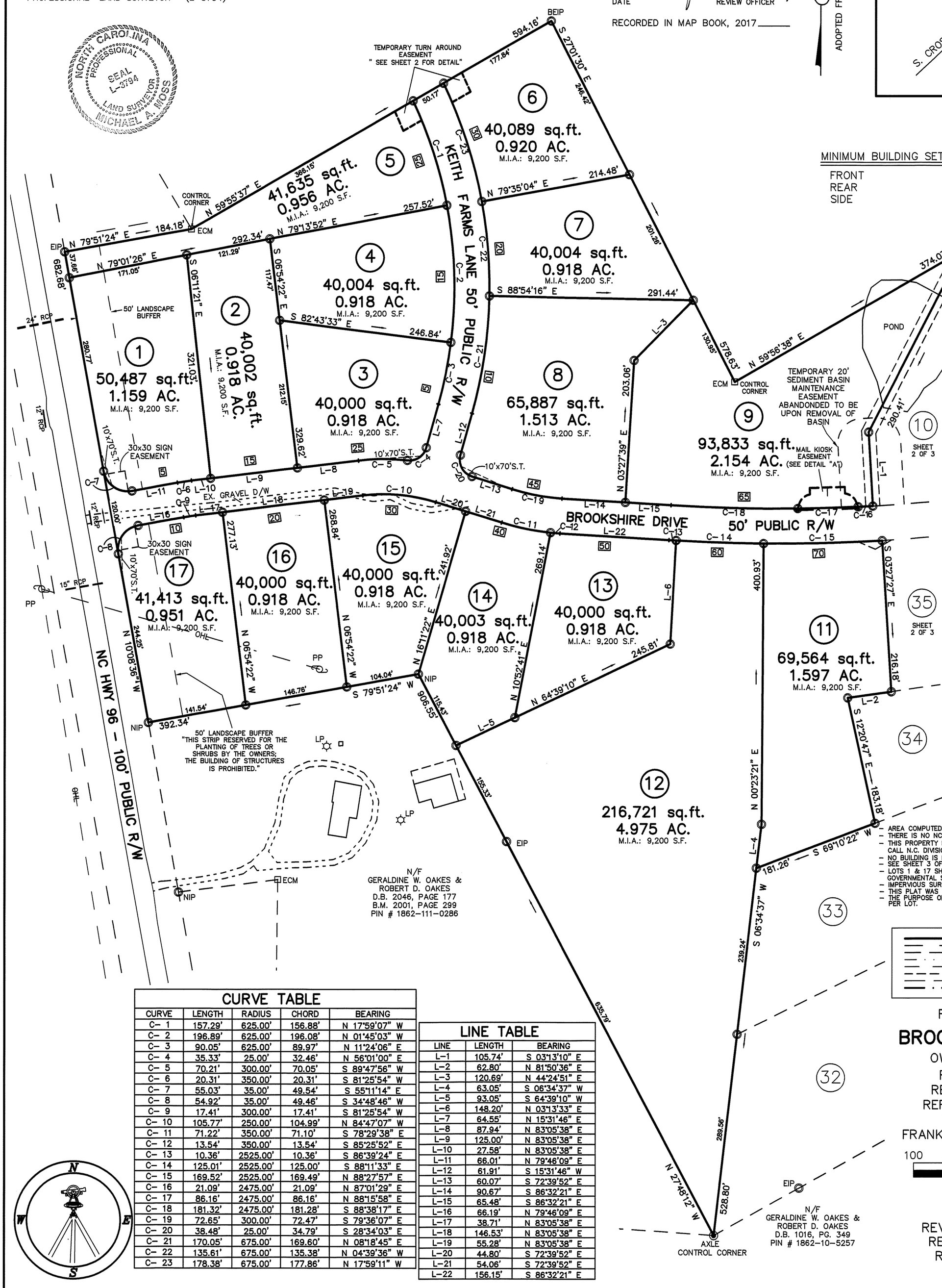

MINIMUM BUILDING SETBACKS

FRONT	50'
REAR	50'
SIDE	20'

LEGEND:

EIP – EXISTING IRON PIPE
EPK – EXISTING PK NAIL
NIP – NEW IRON PIPE SET
R/W – RIGHT OF WAY
CATV – CABLE TV BOX
EB – ELECTRIC BOX
TEL – TELEPHONE PEDESTAL
PP – POWER POLE
OHL – OVERHEAD LINE
LP – LIGHT POLE
WM – WATER METER
WV – WATER VALVE
CO – SEWER CLEAN-OUT
◎ – NEW IRON PIPE
XXX – ADDRESS
BEIP– BENT EXISTING IRON PIPE
ECM–EXISTING CONCRETE MONUMENT

Doc ID: 005431170003 Type: CRP
Recorded: 03/28/2017 at 04:05:59 PM
Fee Amt: $63.00 Page 1 of 3
Franklin County North Carolina
Brandi S. Davis Register of Deeds
BK 2017 PG 93-95

DETAIL "A"

MAIL KIOSK DETAIL
N.T.S.

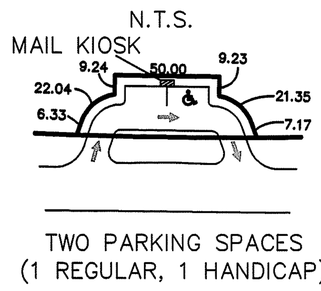

TWO PARKING SPACES (1 REGULAR, 1 HANDICAP)

NOTES:

- AREA COMPUTED BY COORDINATE METHOD.
- THERE IS NO NCGS MONUMENT WITHIN 2000' OF THIS PROPERTY.
- THIS PROPERTY MAY BE SUBJECT TO NEUSE RIVER RIPARIAN BUFFER RULES. CALL N.C. DIVISION OF WATER QUALITY TO VERIFY (919-791-4200).
- NO BUILDING IS PERMITTED WITHIN 20' OF A WATERSUPPLY WATERSHED BUFFER.
- SEE SHEET 3 OF 3 FOR NCDOT SIGNOFF OWNERS SIGNATURE OTHER
- LOTS 1 & 17 SHALL BE SERVED INTERNALLY GOVERNMENTAL SIGNATURES
- IMPERVIOUS SURFACE SHALL NOT EXCEED 12%
- THIS PLAT WAS PREVIOUSLY RECORDED IN M.B. 2017, PAGE 14-16.
- THE PURPOSE OF THIS PLAT IS TO ADD IMPERVIOUS LIMITS OF 9,200 S.F. PER LOT.

LINE TYPE LEGEND

- PROPERTY LINE – LINE SURVEYED
- RIGHT-OF-WAY
- ADJOINING LINE – LINE NOT SURVEYED
- OVERHEAD LINE
- BUILDING SETBACK
- EASEMENT
- BUFFER
- FLOOD HAZARD SOILS

CURVE TABLE

CURVE	LENGTH	RADIUS	CHORD	BEARING
C- 1	157.29'	625.00'	156.88'	N 17°59'07" W
C- 2	196.89'	625.00'	196.08'	N 01°45'03" W
C- 3	90.05'	625.00'	89.97'	N 11°24'06" E
C- 4	35.33'	25.00'	32.46'	N 56°01'00" E
C- 5	70.21'	300.00'	70.05'	S 89°47'56" W
C- 6	20.31'	350.00'	20.31'	S 81°25'54" W
C- 7	55.03'	35.00'	49.54'	S 55°11'14" E
C- 8	54.92'	35.00'	49.46'	S 34°48'46" W
C- 9	17.41'	300.00'	17.41'	S 81°25'54" W
C- 10	105.77'	250.00'	104.99'	N 84°47'07" W
C- 11	71.22'	350.00'	71.10'	S 78°29'38" E
C- 12	13.54'	350.00'	13.54'	S 85°25'52" E
C- 13	10.36'	2525.00'	10.36'	S 86°39'24" E
C- 14	125.01'	2525.00'	125.00'	S 88°11'33" E
C- 15	169.52'	2525.00'	169.49'	N 88°27'57" E
C- 16	21.09'	2475.00'	21.09'	N 87°01'29" E
C- 17	86.16'	2475.00'	86.16'	N 88°15'58" E
C- 18	181.32'	2475.00'	181.28'	S 88°38'17" E
C- 19	72.65'	300.00'	72.47'	S 79°36'07" E
C- 20	38.48'	25.00'	34.79'	S 28°34'03" E
C- 21	170.05'	675.00'	169.60'	N 08°18'45" E
C- 22	135.61'	675.00'	135.38'	N 04°39'36" W
C- 23	178.38'	675.00'	177.86'	N 17°59'11" W

LINE TABLE

LINE	LENGTH	BEARING
L-1	105.74'	S 03°13'10" E
L-2	62.80'	N 81°50'36" E
L-3	120.69'	N 44°24'51" E
L-4	63.05'	S 06°34'37" W
L-5	93.05'	S 64°39'10" W
L-6	148.20'	N 03°13'33" E
L-7	64.55'	N 15°31'46" E
L-8	87.94'	N 83°05'38" E
L-9	125.00'	N 83°05'38" E
L-10	27.58'	N 83°05'38" E
L-11	66.01'	N 79°46'09" E
L-12	61.91'	S 15°31'46" W
L-13	60.07'	S 72°39'52" E
L-14	90.67'	S 86°32'21" E
L-15	65.48'	S 86°32'21" E
L-16	66.19'	N 79°46'09" E
L-17	38.71'	N 83°05'38" E
L-18	146.53'	N 83°05'38" E
L-19	55.28'	N 83°05'38" E
L-20	44.80'	S 72°39'52" E
L-21	54.06'	S 72°39'52" E
L-22	156.15'	S 86°32'21" E

FINAL SUBDIVISION PLAT

BROOKSHIRE SUBDIVISION

OWNER: KEITH FARMS, LLC
REF: D.B. 2005, PAGE 1
REF: M.B. 2015, PAGE 179
REF: M.B. 2017, PAGE 14-16
YOUNGSVILLE TOWNSHIP
FRANKIN COUNTY, NORTH CAROLINA

100 50 0 100 200

SCALE 1"=100'

NOVEMBER 23, 2015
REVISED SEPTEMBER 15, 2016
REVISED NOVEMBER 1, 2016
REVISED MARCH 20, 2017
ZONED R-40 WSII
PIN # 1862-11-8555
SHEET 1 OF 3

(KEITH-HWY96 - JC)

CAWTHORNE, MOSS & PANCIERA, P.C.
PROFESSIONAL LAND SURVEYORS, C-1525, 333 S. WHITE STREET, P.O. BOX 1253, WAKE FOREST N.C., 27588, (919) 556-3148

I, MICHAEL A. MOSS, CERTIFY THAT THIS PLAT WAS DRAWN UNDER MY SUPERVISION FROM AN ACTUAL SURVEY MADE UNDER MY SUPERVISION; THAT THE SOURCE OF INFORMATION FOR THE SURVEY IS SHOWN HEREON; THAT THE BOUNDARIES NOT SURVEYED ARE CLEARLY INDICATED; THAT THE RATIO OF PRECISION IS GREATER THAN 1:10,000; THAT THIS PLAT WAS PREPARED IN ACCORDANCE WITH G.S. 47-30 AS AMENDED: AND THAT THIS MAP MEETS THE REQUIREMENTS OF THE STANDARDS OF PRACTICE FOR LAND SURVEYING IN NORTH CAROLINA (21 NCAC 56. 1600). WITNESS MY ORIGINAL SIGNATURE, REGISTRATION NUMBER AND SEAL

THIS 23RD DAY OF MARCH ,2017.

PROFESSIONAL LAND SURVEYOR (L-3794)

NORTH CAROLINA PROFESSIONAL SEAL L-3794 LAND SURVEYOR MICHAEL A. MOSS

I, MICHAEL A. MOSS, PROFESSIONAL LAND SURVEYOR NO. L-3794, CERTIFY THAT THIS PLAT IS OF A SURVEY OF AN EXISTING PARCEL OR PARCELS OF LAND AND DOES NOT CREATE A NEW STREET OR CHANGE AN EXISTING STREET.

MICHAEL A. MOSS, PROFESSIONAL LAND SURVEYOR NO. L-3794

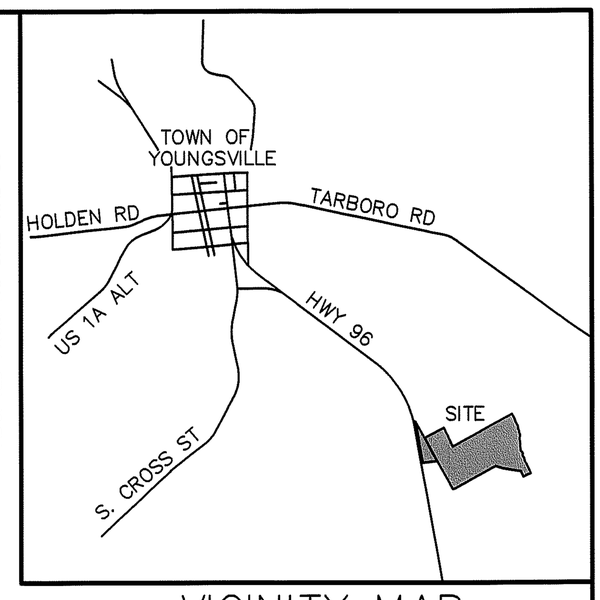

VICINITY MAP

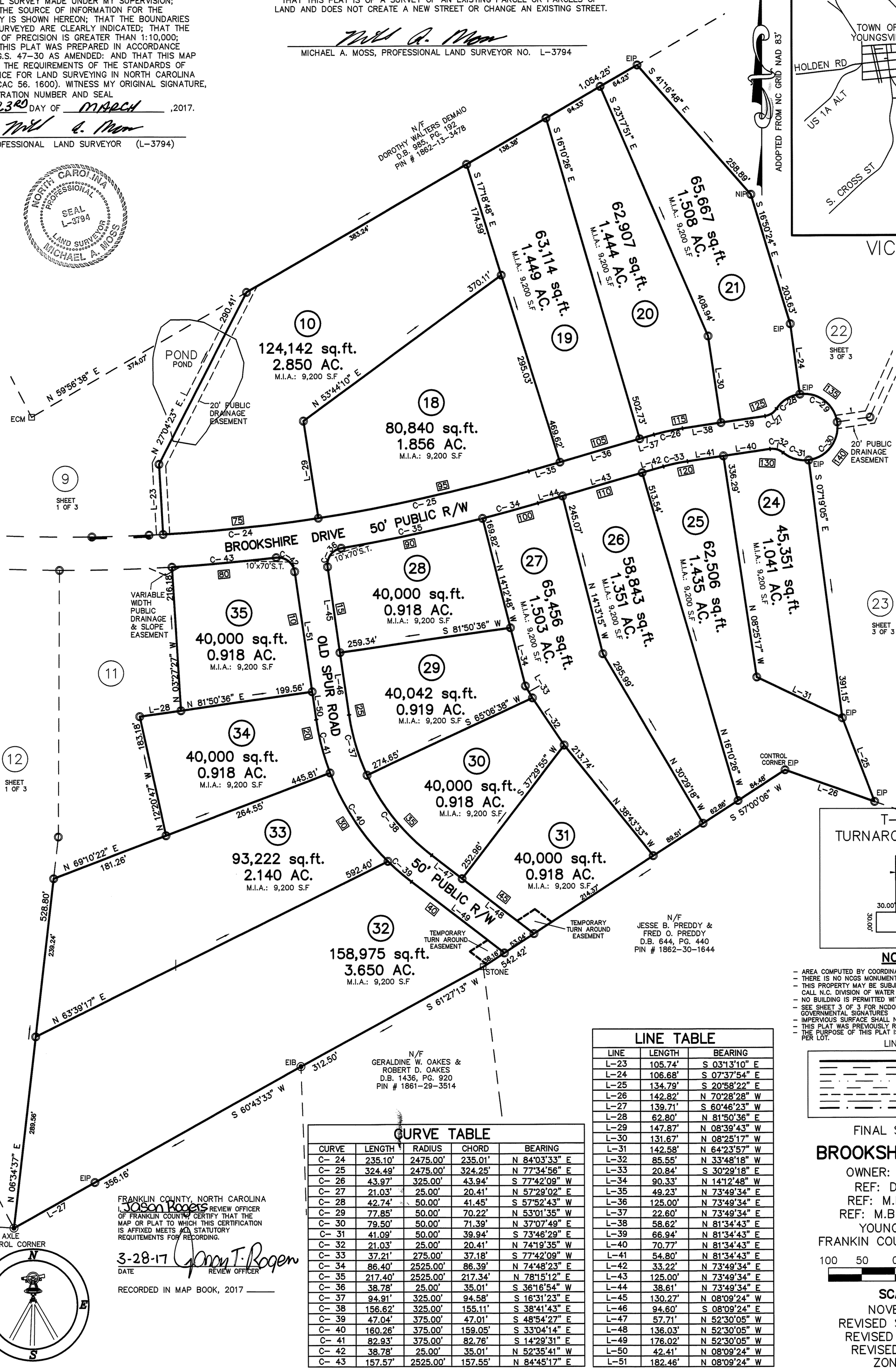

LEGEND:

EIP – EXISTING IRON PIPE
EPK – EXISTING PK NAIL
NIP – NEW IRON PIPE SET
R/W – RIGHT OF WAY
CATV – CABLE TV BOX
EB – ELECTRIC BOX
TEL – TELEPHONE PEDESTAL
PP – POWER POLE
OHL – OVERHEAD LINE
LP – LIGHT POLE
WM – WATER METER
WV – WATER VALVE
CO – SEWER CLEAN-OUT
◎ – NEW IRON PIPE
XXX – ADDRESS
ECM–EXISTING CONCRETE MONUMENT

MINIMUM BUILDING SETBACKS

FRONT	50'
REAR	50'
SIDE	20'

T-TYPE TURNAROUND DETAIL

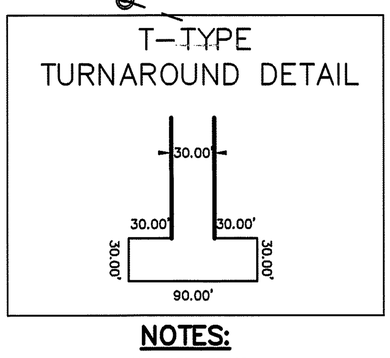

NOTES:

- AREA COMPUTED BY COORDINATE METHOD.
- THERE IS NO NCGS MONUMENT WITHIN 2000' OF THIS PROPERTY.
- THIS PROPERTY MAY BE SUBJECT TO NEUSE RIVER RIPARIAN BUFFER RULES. CALL N.C. DIVISION OF WATER QUALITY TO VERIFY (919-791-4200).
- NO BUILDING IS PERMITTED WITHIN 20' OF A WATERSUPPLY WATERSHED BUFFER.
- SEE SHEET 3 OF 3 FOR NCDOT SIGNOFF OWNERS SIGNATURE OTHER GOVERNMENTAL SIGNATURES
- IMPERVIOUS SURFACE SHALL NOT EXCEED 12%
- THIS PLAT WAS PREVIOUSLY RECORDED IN M.B. 2017, PAGE 14-16.
- THE PURPOSE OF THIS PLAT IS TO ADD IMPERVIOUS LIMITS OF 9,200 S.F. PER LOT.

LINE TYPE LEGEND

PROPERTY LINE – LINE SURVEYED
RIGHT-OF-WAY
ADJOINING LINE – LINE NOT SURVEYED
OVERHEAD LINE
BUILDING SETBACK
EASEMENT
BUFFER
FLOOD HAZARD SOILS

LINE TABLE

LINE	LENGTH	BEARING
L-23	105.74'	S 03°13'10" E
L-24	106.68'	S 07°37'54" E
L-25	134.79'	S 20°58'22" E
L-26	142.82'	N 70°28'28" W
L-27	139.71'	S 60°46'23" W
L-28	62.80'	N 81°50'36" E
L-29	147.87'	N 08°39'43" W
L-30	131.67'	N 08°25'17" W
L-31	142.58'	N 64°23'57" W
L-32	85.55'	N 33°48'18" W
L-33	20.84'	S 30°29'18" E
L-34	90.33'	N 14°12'48" W
L-35	49.23'	N 73°49'34" E
L-36	125.00'	N 73°49'34" E
L-37	22.60'	N 73°49'34" E
L-38	58.62'	N 81°34'43" E
L-39	66.94'	N 81°34'43" E
L-40	70.77'	N 81°34'43" E
L-41	54.80'	N 81°34'43" E
L-42	33.22'	N 73°49'34" E
L-43	125.00'	N 73°49'34" E
L-44	38.61'	N 73°49'34" E
L-45	130.27'	N 08°09'24" W
L-46	94.60'	S 08°09'24" E
L-47	57.71'	N 52°30'05" W
L-48	136.03'	N 52°30'05" W
L-49	176.02'	N 52°30'05" W
L-50	42.41'	N 08°09'24" W
L-51	182.46'	N 08°09'24" W

CURVE TABLE

CURVE	LENGTH	RADIUS	CHORD	BEARING
C-24	235.10'	2475.00'	235.01'	N 84°03'33" E
C-25	324.49'	2475.00'	324.25'	N 77°34'56" E
C-26	43.97'	325.00'	43.94'	S 77°42'09" W
C-27	21.03'	25.00'	20.41'	N 57°29'02" E
C-28	42.74'	50.00'	41.45'	S 57°52'43" W
C-29	77.85'	50.00'	70.22'	N 53°01'35" W
C-30	79.50'	50.00'	71.39'	N 37°07'49" E
C-31	41.09'	50.00'	39.94'	S 73°46'29" E
C-32	21.03'	25.00'	20.41'	N 74°19'35" W
C-33	37.21'	275.00'	37.18'	S 77°42'09" W
C-34	86.40'	2525.00'	86.39'	N 74°48'23" E
C-35	217.40'	2525.00'	217.34'	N 78°15'12" E
C-36	38.78'	25.00'	35.01'	S 36°16'54" W
C-37	94.91'	325.00'	94.58'	S 16°31'23" E
C-38	156.62'	325.00'	155.11'	S 38°41'43" E
C-39	47.04'	375.00'	47.01'	S 48°54'27" E
C-40	160.26'	375.00'	159.05'	S 33°04'14" E
C-41	82.93'	375.00'	82.76'	S 14°29'31" E
C-42	38.78'	25.00'	35.01'	N 52°35'41" W
C-43	157.57'	2525.00'	157.55'	N 84°45'17" E

FRANKLIN COUNTY, NORTH CAROLINA
I, Jason Rogers REVIEW OFFICER OF FRANKLIN COUNTY, CERTIFY THAT THE MAP OR PLAT TO WHICH THIS CERTIFICATION IS AFFIXED MEETS ALL STATUTORY REQUITEMENTS FOR RECORDING.

3-28-17 Jason T. Rogers
DATE REVIEW OFFICER

RECORDED IN MAP BOOK, 2017 _____

FINAL SUBDIVISION PLAT

BROOKSHIRE SUBDIVISION

OWNER: KEITH FARMS, LLC
REF: D.B. 2005, PAGE 1
REF: M.B. 2015, PAGE 179
REF: M.B. 2017, PAGE 14-16
YOUNGSVILLE TOWNSHIP
FRANKIN COUNTY, NORTH CAROLINA

100 50 0 100 200

SCALE 1"=100'
NOVEMBER 23, 2015
REVISED SEPTEMBER 15, 2016
REVISED NOVEMBER 1, 2016
REVISED MARCH 20, 2017
ZONED R-40 WSII
PIN # 1862-11-8555
SHEET 2 OF 3

(KEITH-HWY96-JC)

CAWTHORNE, MOSS & PANCIERA, P.C.
PROFESSIONAL LAND SURVEYORS, C-1525, 333 S. WHITE STREET, P.O. BOX 1253, WAKE FOREST N.C., 27588, (919) 556-3148

I, MICHAEL A. MOSS, CERTIFY THAT THIS PLAT WAS DRAWN UNDER MY SUPERVISION FROM AN ACTUAL SURVEY MADE UNDER MY SUPERVISION; THAT THE SOURCE OF INFORMATION FOR THE SURVEY IS SHOWN HEREON; THAT THE BOUNDARIES NOT SURVEYED ARE CLEARLY INDICATED; THAT THE RATIO OF PRECISION IS GREATER THAN 1:10,000; THAT THIS PLAT WAS PREPARED IN ACCORDANCE WITH G.S. 47-30 AS AMENDED: AND THAT THIS MAP MEETS THE REQUIREMENTS OF THE STANDARDS OF PRACTICE FOR LAND SURVEYING IN NORTH CAROLINA (21 NCAC 56. 1600). WITNESS MY ORIGINAL SIGNATURE, REGISTRATION NUMBER AND SEAL

THIS 23RD DAY OF MARCH ,2017.

PROFESSIONAL LAND SURVEYOR (L-3794)

NORTH CAROLINA PROFESSIONAL SEAL L-3794 LAND SURVEYOR MICHAEL A. MOSS

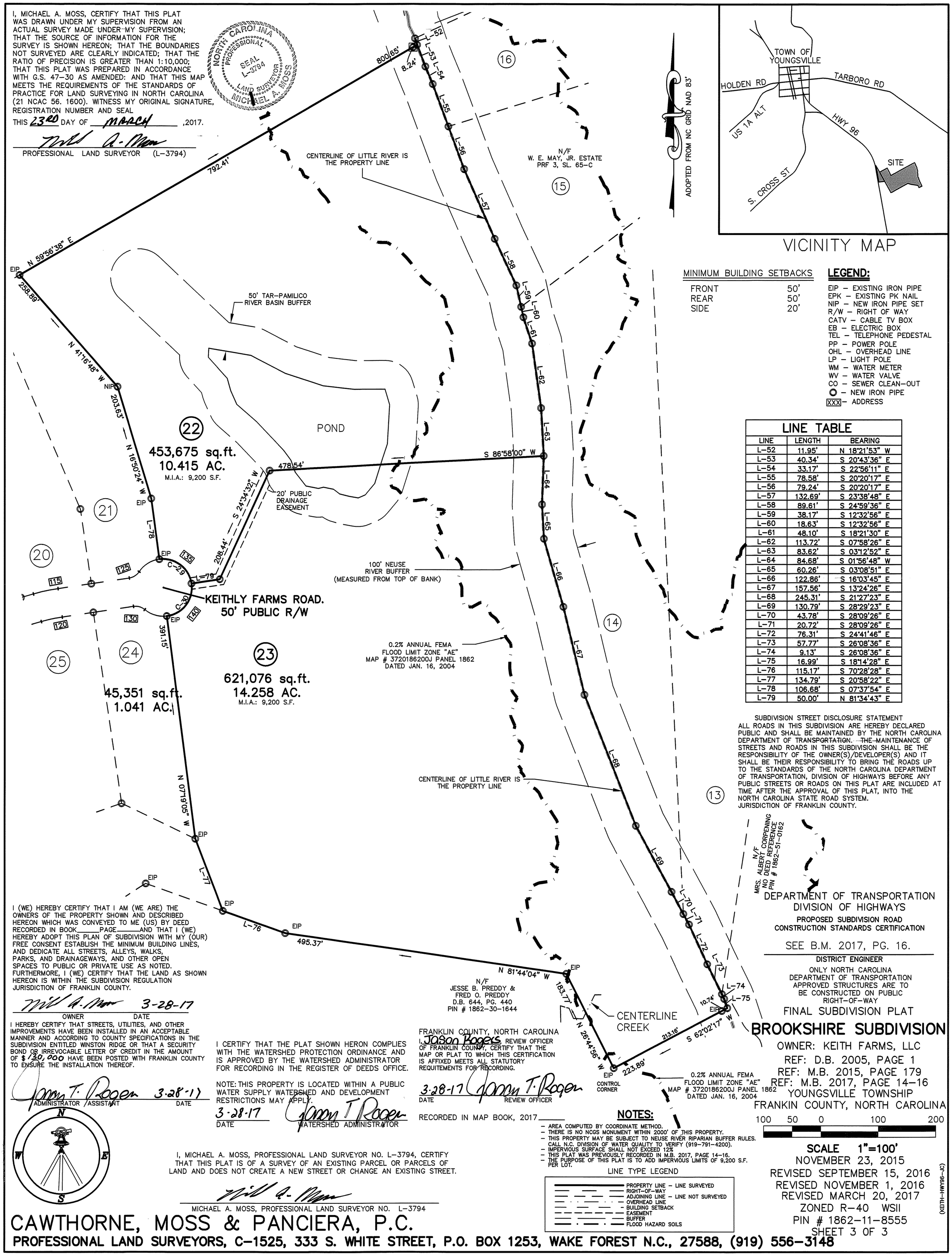

MINIMUM BUILDING SETBACKS

FRONT	50'
REAR	50'
SIDE	20'

LEGEND:

EIP – EXISTING IRON PIPE
EPK – EXISTING PK NAIL
NIP – NEW IRON PIPE SET
R/W – RIGHT OF WAY
CATV – CABLE TV BOX
EB – ELECTRIC BOX
TEL – TELEPHONE PEDESTAL
PP – POWER POLE
OHL – OVERHEAD LINE
LP – LIGHT POLE
WM – WATER METER
WV – WATER VALVE
CO – SEWER CLEAN-OUT
O – NEW IRON PIPE
XXX – ADDRESS

LINE TABLE

LINE	LENGTH	BEARING
L-52	11.95'	N 18°21'53" W
L-53	40.34'	S 20°43'36" E
L-54	33.17'	S 22°56'11" E
L-55	78.58'	S 20°20'17" E
L-56	79.24'	S 20°20'17" E
L-57	132.69'	S 23°38'48" E
L-58	89.61'	S 24°59'36" E
L-59	38.17'	S 12°32'56" E
L-60	18.63'	S 12°32'56" E
L-61	48.10'	S 18°21'30" E
L-62	113.72'	S 07°58'26" E
L-63	83.62'	S 03°12'52" E
L-64	84.68'	S 01°56'48" W
L-65	60.26'	S 03°08'51" E
L-66	122.86'	S 16°03'45" E
L-67	157.56'	S 13°24'26" E
L-68	245.31'	S 21°27'23" E
L-69	130.79'	S 28°29'23" E
L-70	43.78'	S 28°09'26" E
L-71	20.72'	S 28°09'26" E
L-72	76.31'	S 24°41'46" E
L-73	57.77'	S 26°08'36" E
L-74	9.13'	S 26°08'36" E
L-75	16.99'	S 18°14'28" E
L-76	115.17'	S 70°28'28" E
L-77	134.79'	S 20°58'22" E
L-78	106.68'	S 07°37'54" E
L-79	50.00'	N 81°34'43" E

SUBDIVISION STREET DISCLOSURE STATEMENT

ALL ROADS IN THIS SUBDIVISION ARE HEREBY DECLARED PUBLIC AND SHALL BE MAINTAINED BY THE NORTH CAROLINA DEPARTMENT OF TRANSPORTATION. THE MAINTENANCE OF STREETS AND ROADS IN THIS SUBDIVISION SHALL BE THE RESPONSIBILITY OF THE OWNER(S)/DEVELOPER(S) AND IT SHALL BE THEIR RESPONSIBILITY TO BRING THE ROADS UP TO THE STANDARDS OF THE NORTH CAROLINA DEPARTMENT OF TRANSPORTATION, DIVISION OF HIGHWAYS BEFORE ANY PUBLIC STREETS OR ROADS ON THIS PLAT ARE INCLUDED AT TIME AFTER THE APPROVAL OF THIS PLAT, INTO THE NORTH CAROLINA STATE ROAD SYSTEM. JURISDICTION OF FRANKLIN COUNTY.

DEPARTMENT OF TRANSPORTATION
DIVISION OF HIGHWAYS
PROPOSED SUBDIVISION ROAD CONSTRUCTION STANDARDS CERTIFICATION

SEE B.M. 2017, PG. 16.

DISTRICT ENGINEER

ONLY NORTH CAROLINA DEPARTMENT OF TRANSPORTATION APPROVED STRUCTURES ARE TO BE CONSTRUCTED ON PUBLIC RIGHT-OF-WAY

I (WE) HEREBY CERTIFY THAT I AM (WE ARE) THE OWNERS OF THE PROPERTY SHOWN AND DESCRIBED HEREON WHICH WAS CONVEYED TO ME (US) BY DEED RECORDED IN BOOK_____PAGE_____AND THAT I (WE) HEREBY ADOPT THIS PLAN OF SUBDIVISION WITH MY (OUR) FREE CONSENT ESTABLISH THE MINIMUM BUILDING LINES, AND DEDICATE ALL STREETS, ALLEYS, WALKS, PARKS, AND DRAINAGEWAYS, AND OTHER OPEN SPACES TO PUBLIC OR PRIVATE USE AS NOTED. FURTHERMORE, I (WE) CERTIFY THAT THE LAND AS SHOWN HEREON IS WITHIN THE SUBDIVISION REGULATION JURISDICTION OF FRANKLIN COUNTY.

3-28-17

OWNER DATE

I HEREBY CERTIFY THAT STREETS, UTILITIES, AND OTHER IMPROVEMENTS HAVE BEEN INSTALLED IN AN ACCEPTABLE MANNER AND ACCORDING TO COUNTY SPECIFICATIONS IN THE SUBDIVISION ENTITLED WINSTON RIDGE OR THAT A SECURITY BOND OR IRREVOCABLE LETTER OF CREDIT IN THE AMOUNT OF $130,000 HAVE BEEN POSTED WITH FRANKLIN COUNTY TO ENSURE THE INSTALLATION THEREOF.

3.28.17

ADMINISTRATOR /ASSISTANT DATE

I CERTIFY THAT THE PLAT SHOWN HERON COMPLIES WITH THE WATERSHED PROTECTION ORDINANCE AND IS APPROVED BY THE WATERSHED ADMINISTRATOR FOR RECORDING IN THE REGISTER OF DEEDS OFFICE.

NOTE: THIS PROPERTY IS LOCATED WITHIN A PUBLIC WATER SUPPLY WATERSHED AND DEVELOPMENT RESTRICTIONS MAY APPLY.

3-28-17

DATE WATERSHED ADMINISTRATOR

FRANKLIN COUNTY, NORTH CAROLINA

I, Jason Rogers, REVIEW OFFICER OF FRANKLIN COUNTY, CERTIFY THAT THE MAP OR PLAT TO WHICH THIS CERTIFICATION IS AFFIXED MEETS ALL STATUTORY REQUITEMENTS FOR RECORDING.

3-28-17

DATE REVIEW OFFICER

RECORDED IN MAP BOOK, 2017_____

NOTES:

- AREA COMPUTED BY COORDINATE METHOD.
- THERE IS NO NCGS MONUMENT WITHIN 2000' OF THIS PROPERTY.
- THIS PROPERTY MAY BE SUBJECT TO NEUSE RIVER RIPARIAN BUFFER RULES. CALL N.C. DIVISION OF WATER QUALITY TO VERIFY (919-791-4200).
- IMPERVIOUS SURFACE SHALL NOT EXCEED 12%
- THIS PLAT WAS PREVIOUSLY RECORDED IN M.B. 2017, PAGE 14-16.
- THE PURPOSE OF THIS PLAT IS TO ADD IMPERVIOUS LIMITS OF 9,200 S.F. PER LOT.

LINE TYPE LEGEND

PROPERTY LINE – LINE SURVEYED
RIGHT-OF-WAY
ADJOINING LINE – LINE NOT SURVEYED
OVERHEAD LINE
BUILDING SETBACK
EASEMENT
BUFFER
FLOOD HAZARD SOILS

FINAL SUBDIVISION PLAT

BROOKSHIRE SUBDIVISION

OWNER: KEITH FARMS, LLC
REF: D.B. 2005, PAGE 1
REF: M.B. 2015, PAGE 179
REF: M.B. 2017, PAGE 14-16
YOUNGSVILLE TOWNSHIP
FRANKIN COUNTY, NORTH CAROLINA

100 50 0 100 200

SCALE 1"=100'
NOVEMBER 23, 2015
REVISED SEPTEMBER 15, 2016
REVISED NOVEMBER 1, 2016
REVISED MARCH 20, 2017
ZONED R-40 WSII
PIN # 1862-11-8555
SHEET 3 OF 3

(KEITH-HWY96-JC)

N W E S

I, MICHAEL A. MOSS, PROFESSIONAL LAND SURVEYOR NO. L-3794, CERTIFY THAT THIS PLAT IS OF A SURVEY OF AN EXISTING PARCEL OR PARCELS OF LAND AND DOES NOT CREATE A NEW STREET OR CHANGE AN EXISTING STREET.

MICHAEL A. MOSS, PROFESSIONAL LAND SURVEYOR NO. L-3794

CAWTHORNE, MOSS & PANCIERA, P.C.
PROFESSIONAL LAND SURVEYORS, C-1525, 333 S. WHITE STREET, P.O. BOX 1253, WAKE FOREST N.C., 27588, (919) 556-3148

I, MICHAEL A. MOSS, CERTIFY THAT THIS PLAT WAS DRAWN UNDER MY SUPERVISION FROM AN ACTUAL SURVEY MADE UNDER MY SUPERVISION; THAT THE SOURCE OF INFORMATION FOR THE SURVEY IS SHOWN HEREON; THAT THE BOUNDARIES NOT SURVEYED ARE CLEARLY INDICATED; THAT THE RATIO OF PRECISION IS GREATER THAN 1:10,000; THAT THIS PLAT WAS PREPARED IN ACCORDANCE WITH G.S. 47-30 AS AMENDED: AND THAT THIS MAP MEETS THE REQUIREMENTS OF THE STANDARDS OF PRACTICE FOR LAND SURVEYING IN NORTH CAROLINA (21 NCAC 56. 1600). WITNESS MY ORIGINAL SIGNATURE, REGISTRATION NUMBER AND SEAL

THIS 23RD DAY OF MARCH ,2017.

PROFESSIONAL LAND SURVEYOR (L-3794)

NORTH CAROLINA PROFESSIONAL SEAL L-3794 LAND SURVEYOR MICHAEL A. MOSS

I, MICHAEL A. MOSS, PROFESSIONAL LAND SURVEYOR NO. L-3794, CERTIFY THAT THIS PLAT IS OF A SURVEY OF AN EXISTING PARCEL OR PARCELS OF LAND AND DOES NOT CREATE A NEW STREET OR CHANGE AN EXISTING STREET.

MICHAEL A. MOSS, PROFESSIONAL LAND SURVEYOR NO. L-3794

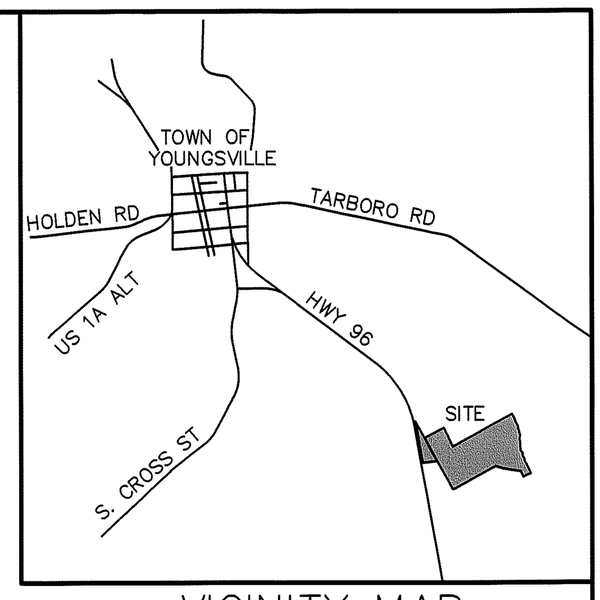

VICINITY MAP

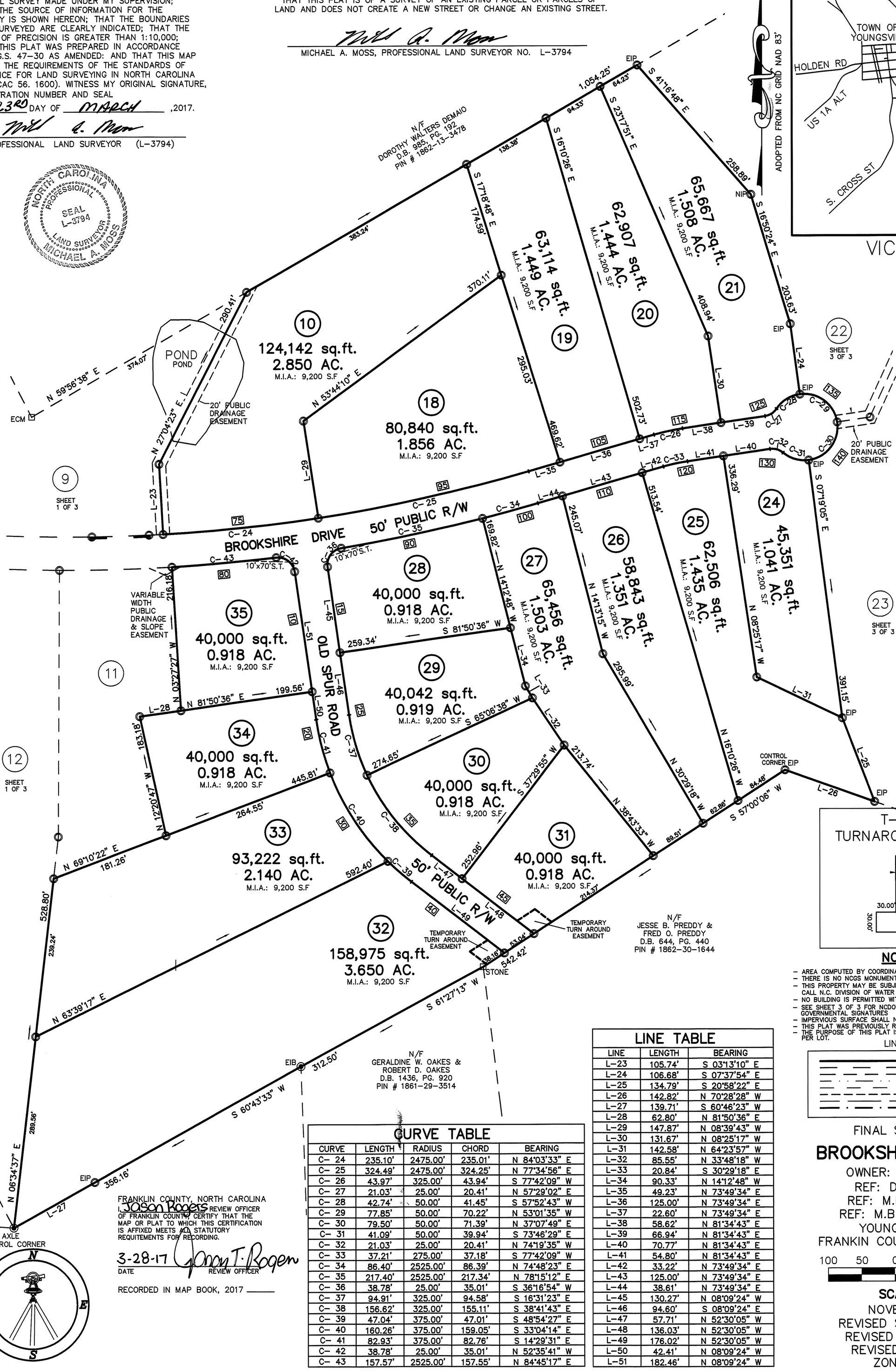

LEGEND:

EIP – EXISTING IRON PIPE
EPK – EXISTING PK NAIL
NIP – NEW IRON PIPE SET
R/W – RIGHT OF WAY
CATV – CABLE TV BOX
EB – ELECTRIC BOX
TEL – TELEPHONE PEDESTAL
PP – POWER POLE
OHL – OVERHEAD LINE
LP – LIGHT POLE
WM – WATER METER
WV – WATER VALVE
CO – SEWER CLEAN-OUT
◎ – NEW IRON PIPE
XXX – ADDRESS
ECM–EXISTING CONCRETE MONUMENT

MINIMUM BUILDING SETBACKS

FRONT	50'
REAR	50'
SIDE	20'

T-TYPE TURNAROUND DETAIL

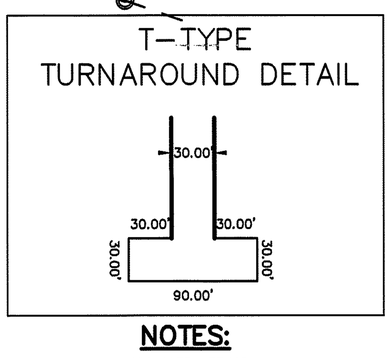

NOTES:

- AREA COMPUTED BY COORDINATE METHOD.
- THERE IS NO NCGS MONUMENT WITHIN 2000' OF THIS PROPERTY.
- THIS PROPERTY MAY BE SUBJECT TO NEUSE RIVER RIPARIAN BUFFER RULES. CALL N.C. DIVISION OF WATER QUALITY TO VERIFY (919-791-4200).
- NO BUILDING IS PERMITTED WITHIN 20' OF A WATERSUPPLY WATERSHED BUFFER.
- SEE SHEET 3 OF 3 FOR NCDOT SIGNOFF OWNERS SIGNATURE OTHER GOVERNMENTAL SIGNATURES
- IMPERVIOUS SURFACE SHALL NOT EXCEED 12%
- THIS PLAT WAS PREVIOUSLY RECORDED IN M.B. 2017, PAGE 14-16.
- THE PURPOSE OF THIS PLAT IS TO ADD IMPERVIOUS LIMITS OF 9,200 S.F. PER LOT.

LINE TYPE LEGEND

PROPERTY LINE – LINE SURVEYED
RIGHT-OF-WAY
ADJOINING LINE – LINE NOT SURVEYED
OVERHEAD LINE
BUILDING SETBACK
EASEMENT
BUFFER
FLOOD HAZARD SOILS

LINE TABLE

LINE	LENGTH	BEARING
L-23	105.74'	S 03°13'10" E
L-24	106.68'	S 07°37'54" E
L-25	134.79'	S 20°58'22" E
L-26	142.82'	N 70°28'28" W
L-27	139.71'	S 60°46'23" W
L-28	62.80'	N 81°50'36" E
L-29	147.87'	N 08°39'43" W
L-30	131.67'	N 08°25'17" W
L-31	142.58'	N 64°23'57" W
L-32	85.55'	N 33°48'18" W
L-33	20.84'	S 30°29'18" E
L-34	90.33'	N 14°12'48" W
L-35	49.23'	N 73°49'34" E
L-36	125.00'	N 73°49'34" E
L-37	22.60'	N 73°49'34" E
L-38	58.62'	N 81°34'43" E
L-39	66.94'	N 81°34'43" E
L-40	70.77'	N 81°34'43" E
L-41	54.80'	N 81°34'43" E
L-42	33.22'	N 73°49'34" E
L-43	125.00'	N 73°49'34" E
L-44	38.61'	N 73°49'34" E
L-45	130.27'	N 08°09'24" W
L-46	94.60'	S 08°09'24" E
L-47	57.71'	N 52°30'05" W
L-48	136.03'	N 52°30'05" W
L-49	176.02'	N 52°30'05" W
L-50	42.41'	N 08°09'24" W
L-51	182.46'	N 08°09'24" W

CURVE TABLE

CURVE	LENGTH	RADIUS	CHORD	BEARING
C-24	235.10'	2475.00'	235.01'	N 84°03'33" E
C-25	324.49'	2475.00'	324.25'	N 77°34'56" E
C-26	43.97'	325.00'	43.94'	S 77°42'09" W
C-27	21.03'	25.00'	20.41'	N 57°29'02" E
C-28	42.74'	50.00'	41.45'	S 57°52'43" W
C-29	77.85'	50.00'	70.22'	N 53°01'35" W
C-30	79.50'	50.00'	71.39'	N 37°07'49" E
C-31	41.09'	50.00'	39.94'	S 73°46'29" E
C-32	21.03'	25.00'	20.41'	N 74°19'35" W
C-33	37.21'	275.00'	37.18'	S 77°42'09" W
C-34	86.40'	2525.00'	86.39'	N 74°48'23" E
C-35	217.40'	2525.00'	217.34'	N 78°15'12" E
C-36	38.78'	25.00'	35.01'	S 36°16'54" W
C-37	94.91'	325.00'	94.58'	S 16°31'23" E
C-38	156.62'	325.00'	155.11'	S 38°41'43" E
C-39	47.04'	375.00'	47.01'	S 48°54'27" E
C-40	160.26'	375.00'	159.05'	S 33°04'14" E
C-41	82.93'	375.00'	82.76'	S 14°29'31" E
C-42	38.78'	25.00'	35.01'	N 52°35'41" W
C-43	157.57'	2525.00'	157.55'	N 84°45'17" E

FRANKLIN COUNTY, NORTH CAROLINA
I, Jason Rogers REVIEW OFFICER OF FRANKLIN COUNTY, CERTIFY THAT THE MAP OR PLAT TO WHICH THIS CERTIFICATION IS AFFIXED MEETS ALL STATUTORY REQUITEMENTS FOR RECORDING.

3-28-17 Jason T. Rogers
DATE REVIEW OFFICER

RECORDED IN MAP BOOK, 2017 _____

FINAL SUBDIVISION PLAT

BROOKSHIRE SUBDIVISION

OWNER: KEITH FARMS, LLC
REF: D.B. 2005, PAGE 1
REF: M.B. 2015, PAGE 179
REF: M.B. 2017, PAGE 14-16
YOUNGSVILLE TOWNSHIP
FRANKIN COUNTY, NORTH CAROLINA

100 50 0 100 200

SCALE 1"=100'
NOVEMBER 23, 2015
REVISED SEPTEMBER 15, 2016
REVISED NOVEMBER 1, 2016
REVISED MARCH 20, 2017
ZONED R-40 WSII
PIN # 1862-11-8555
SHEET 2 OF 3

(KEITH-HWY96-JC)

CAWTHORNE, MOSS & PANCIERA, P.C.
PROFESSIONAL LAND SURVEYORS, C-1525, 333 S. WHITE STREET, P.O. BOX 1253, WAKE FOREST N.C., 27588, (919) 556-3148

I, MICHAEL A. MOSS, CERTIFY THAT THIS PLAT WAS DRAWN UNDER MY SUPERVISION FROM AN ACTUAL SURVEY MADE UNDER MY SUPERVISION; THAT THE SOURCE OF INFORMATION FOR THE SURVEY IS SHOWN HEREON; THAT THE BOUNDARIES NOT SURVEYED ARE CLEARLY INDICATED; THAT THE RATIO OF PRECISION IS GREATER THAN 1:10,000; THAT THIS PLAT WAS PREPARED IN ACCORDANCE WITH G.S. 47-30 AS AMENDED: AND THAT THIS MAP MEETS THE REQUIREMENTS OF THE STANDARDS OF PRACTICE FOR LAND SURVEYING IN NORTH CAROLINA (21 NCAC 56. 1600). WITNESS MY ORIGINAL SIGNATURE, REGISTRATION NUMBER AND SEAL

THIS 23RD DAY OF MARCH ,2017.

PROFESSIONAL LAND SURVEYOR (L-3794)

NORTH CAROLINA PROFESSIONAL SEAL L-3794 LAND SURVEYOR MICHAEL A. MOSS

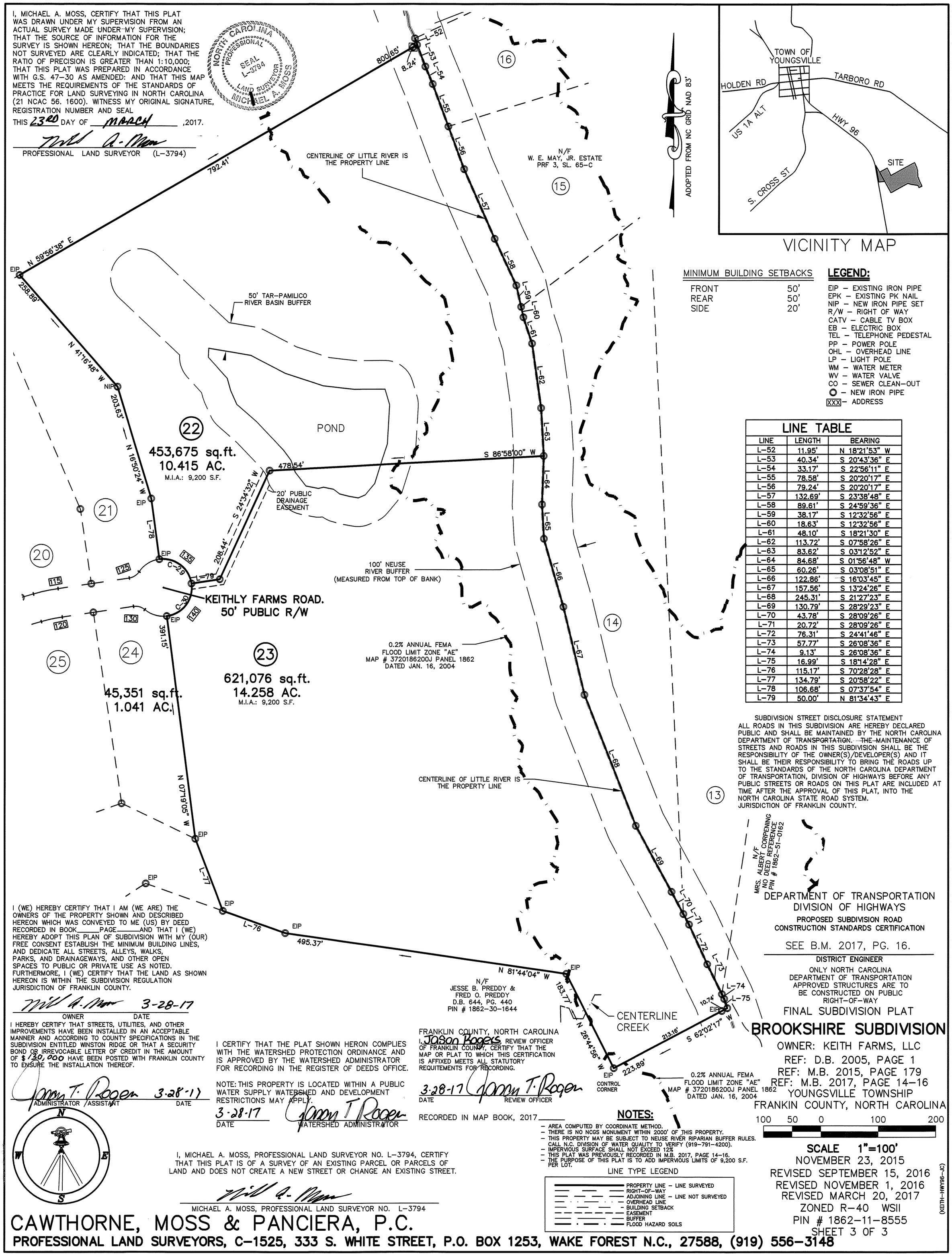

MINIMUM BUILDING SETBACKS

FRONT	50'
REAR	50'
SIDE	20'

LEGEND:

EIP – EXISTING IRON PIPE
EPK – EXISTING PK NAIL
NIP – NEW IRON PIPE SET
R/W – RIGHT OF WAY
CATV – CABLE TV BOX
EB – ELECTRIC BOX
TEL – TELEPHONE PEDESTAL
PP – POWER POLE
OHL – OVERHEAD LINE
LP – LIGHT POLE
WM – WATER METER
WV – WATER VALVE
CO – SEWER CLEAN-OUT
O – NEW IRON PIPE
XXX – ADDRESS

LINE TABLE

LINE	LENGTH	BEARING
L-52	11.95'	N 18°21'53" W
L-53	40.34'	S 20°43'36" E
L-54	33.17'	S 22°56'11" E
L-55	78.58'	S 20°20'17" E
L-56	79.24'	S 20°20'17" E
L-57	132.69'	S 23°38'48" E
L-58	89.61'	S 24°59'36" E
L-59	38.17'	S 12°32'56" E
L-60	18.63'	S 12°32'56" E
L-61	48.10'	S 18°21'30" E
L-62	113.72'	S 07°58'26" E
L-63	83.62'	S 03°12'52" E
L-64	84.68'	S 01°56'48" W
L-65	60.26'	S 03°08'51" E
L-66	122.86'	S 16°03'45" E
L-67	157.56'	S 13°24'26" E
L-68	245.31'	S 21°27'23" E
L-69	130.79'	S 28°29'23" E
L-70	43.78'	S 28°09'26" E
L-71	20.72'	S 28°09'26" E
L-72	76.31'	S 24°41'46" E
L-73	57.77'	S 26°08'36" E
L-74	9.13'	S 26°08'36" E
L-75	16.99'	S 18°14'28" E
L-76	115.17'	S 70°28'28" E
L-77	134.79'	S 20°58'22" E
L-78	106.68'	S 07°37'54" E
L-79	50.00'	N 81°34'43" E

SUBDIVISION STREET DISCLOSURE STATEMENT

ALL ROADS IN THIS SUBDIVISION ARE HEREBY DECLARED PUBLIC AND SHALL BE MAINTAINED BY THE NORTH CAROLINA DEPARTMENT OF TRANSPORTATION. THE MAINTENANCE OF STREETS AND ROADS IN THIS SUBDIVISION SHALL BE THE RESPONSIBILITY OF THE OWNER(S)/DEVELOPER(S) AND IT SHALL BE THEIR RESPONSIBILITY TO BRING THE ROADS UP TO THE STANDARDS OF THE NORTH CAROLINA DEPARTMENT OF TRANSPORTATION, DIVISION OF HIGHWAYS BEFORE ANY PUBLIC STREETS OR ROADS ON THIS PLAT ARE INCLUDED AT TIME AFTER THE APPROVAL OF THIS PLAT, INTO THE NORTH CAROLINA STATE ROAD SYSTEM. JURISDICTION OF FRANKLIN COUNTY.

DEPARTMENT OF TRANSPORTATION
DIVISION OF HIGHWAYS
PROPOSED SUBDIVISION ROAD CONSTRUCTION STANDARDS CERTIFICATION

SEE B.M. 2017, PG. 16.

DISTRICT ENGINEER

ONLY NORTH CAROLINA DEPARTMENT OF TRANSPORTATION APPROVED STRUCTURES ARE TO BE CONSTRUCTED ON PUBLIC RIGHT-OF-WAY

I (WE) HEREBY CERTIFY THAT I AM (WE ARE) THE OWNERS OF THE PROPERTY SHOWN AND DESCRIBED HEREON WHICH WAS CONVEYED TO ME (US) BY DEED RECORDED IN BOOK_____PAGE_____AND THAT I (WE) HEREBY ADOPT THIS PLAN OF SUBDIVISION WITH MY (OUR) FREE CONSENT ESTABLISH THE MINIMUM BUILDING LINES, AND DEDICATE ALL STREETS, ALLEYS, WALKS, PARKS, AND DRAINAGEWAYS, AND OTHER OPEN SPACES TO PUBLIC OR PRIVATE USE AS NOTED. FURTHERMORE, I (WE) CERTIFY THAT THE LAND AS SHOWN HEREON IS WITHIN THE SUBDIVISION REGULATION JURISDICTION OF FRANKLIN COUNTY.

3-28-17

OWNER DATE

I HEREBY CERTIFY THAT STREETS, UTILITIES, AND OTHER IMPROVEMENTS HAVE BEEN INSTALLED IN AN ACCEPTABLE MANNER AND ACCORDING TO COUNTY SPECIFICATIONS IN THE SUBDIVISION ENTITLED WINSTON RIDGE OR THAT A SECURITY BOND OR IRREVOCABLE LETTER OF CREDIT IN THE AMOUNT OF $130,000 HAVE BEEN POSTED WITH FRANKLIN COUNTY TO ENSURE THE INSTALLATION THEREOF.

3.28.17

ADMINISTRATOR /ASSISTANT DATE

I CERTIFY THAT THE PLAT SHOWN HERON COMPLIES WITH THE WATERSHED PROTECTION ORDINANCE AND IS APPROVED BY THE WATERSHED ADMINISTRATOR FOR RECORDING IN THE REGISTER OF DEEDS OFFICE.

NOTE: THIS PROPERTY IS LOCATED WITHIN A PUBLIC WATER SUPPLY WATERSHED AND DEVELOPMENT RESTRICTIONS MAY APPLY.

3-28-17

DATE WATERSHED ADMINISTRATOR

FRANKLIN COUNTY, NORTH CAROLINA

I, Jason Rogers, REVIEW OFFICER OF FRANKLIN COUNTY, CERTIFY THAT THE MAP OR PLAT TO WHICH THIS CERTIFICATION IS AFFIXED MEETS ALL STATUTORY REQUITEMENTS FOR RECORDING.

3-28-17

DATE REVIEW OFFICER

RECORDED IN MAP BOOK, 2017_____

NOTES:

- AREA COMPUTED BY COORDINATE METHOD.
- THERE IS NO NCGS MONUMENT WITHIN 2000' OF THIS PROPERTY.
- THIS PROPERTY MAY BE SUBJECT TO NEUSE RIVER RIPARIAN BUFFER RULES. CALL N.C. DIVISION OF WATER QUALITY TO VERIFY (919-791-4200).
- IMPERVIOUS SURFACE SHALL NOT EXCEED 12%
- THIS PLAT WAS PREVIOUSLY RECORDED IN M.B. 2017, PAGE 14-16.
- THE PURPOSE OF THIS PLAT IS TO ADD IMPERVIOUS LIMITS OF 9,200 S.F. PER LOT.

LINE TYPE LEGEND

PROPERTY LINE – LINE SURVEYED
RIGHT-OF-WAY
ADJOINING LINE – LINE NOT SURVEYED
OVERHEAD LINE
BUILDING SETBACK
EASEMENT
BUFFER
FLOOD HAZARD SOILS

FINAL SUBDIVISION PLAT

BROOKSHIRE SUBDIVISION

OWNER: KEITH FARMS, LLC
REF: D.B. 2005, PAGE 1
REF: M.B. 2015, PAGE 179
REF: M.B. 2017, PAGE 14-16
YOUNGSVILLE TOWNSHIP
FRANKIN COUNTY, NORTH CAROLINA

100 50 0 100 200

SCALE 1"=100'
NOVEMBER 23, 2015
REVISED SEPTEMBER 15, 2016
REVISED NOVEMBER 1, 2016
REVISED MARCH 20, 2017
ZONED R-40 WSII
PIN # 1862-11-8555
SHEET 3 OF 3

(KEITH-HWY96-JC)

N W E S

I, MICHAEL A. MOSS, PROFESSIONAL LAND SURVEYOR NO. L-3794, CERTIFY THAT THIS PLAT IS OF A SURVEY OF AN EXISTING PARCEL OR PARCELS OF LAND AND DOES NOT CREATE A NEW STREET OR CHANGE AN EXISTING STREET.

MICHAEL A. MOSS, PROFESSIONAL LAND SURVEYOR NO. L-3794

CAWTHORNE, MOSS & PANCIERA, P.C.
PROFESSIONAL LAND SURVEYORS, C-1525, 333 S. WHITE STREET, P.O. BOX 1253, WAKE FOREST N.C., 27588, (919) 556-3148